Cambridge Assessment International Education

Cambridge O Level

CANDIDATE NAME	

CENTRE NUMBER						CANDIDATE NUMBER				

8632516

ENVIRONMENTAL MANAGEMENT **5014/22**

Paper 2 Management in Context **May/June 2021**

1 hour 45 minutes

You must answer on the question paper.

No additional materials are needed.

INSTRUCTIONS

- Answer **all** questions.
- Use a black or dark blue pen. You may use an HB pencil for any diagrams or graphs.
- Write your name, centre number and candidate number in the boxes at the top of the page.
- Write your answer to each question in the space provided.
- Do **not** use an erasable pen or correction fluid.
- Do **not** write on any bar codes.
- You may use a calculator.
- You should show all your working and use appropriate units.

INFORMATION

- The total mark for this paper is 80.
- The number of marks for each question or part question is shown in brackets [ ].

This document has **24** pages.

DC (CE/CB) 213338
© UCLES 2021

world map showing the location of the Dominican Republic

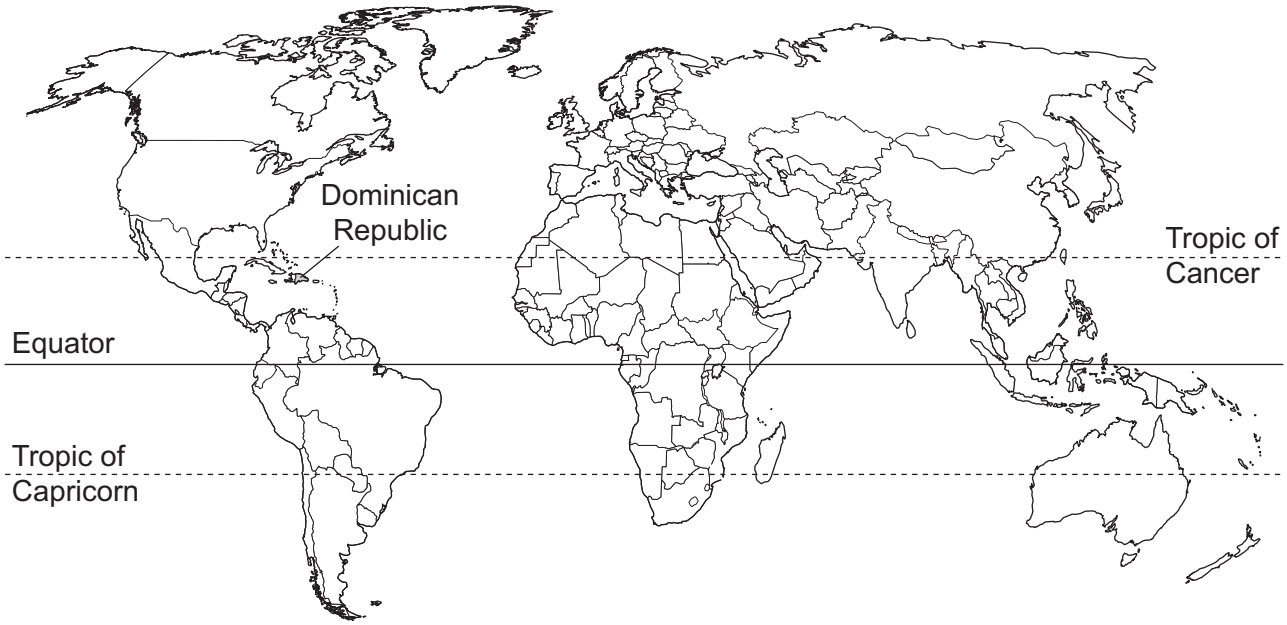

map of the Dominican Republic

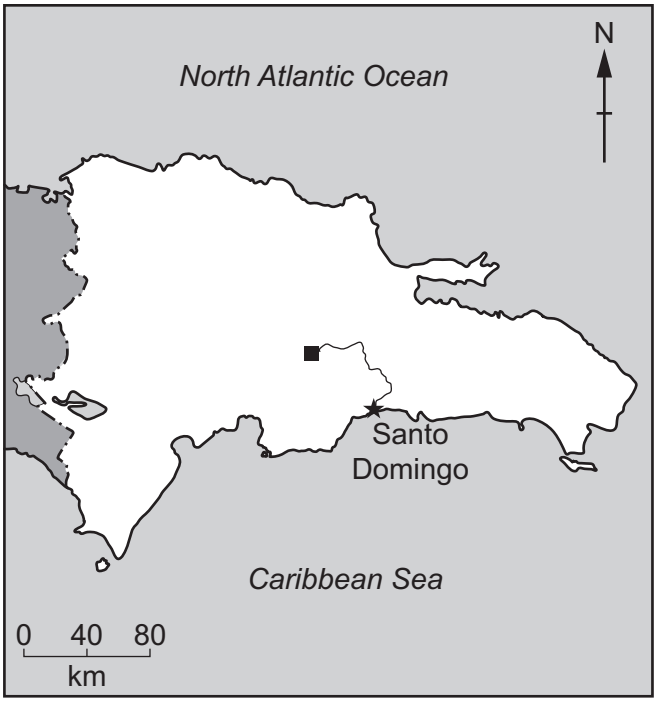

Key

- international boundary
- ★ capital city
- Ozama River
- ■ copper mine

Area of the Dominican Republic: 48 670 km^2

Population: 11.0 million (in 2019)

Children per woman: 2.28

Life expectancy: 71.3 years

Currency: Dominican peso (51 DOP = 1 USD)

Language: Spanish

Climate of the Dominican Republic: tropical along the coast, cooler and wetter in the mountains, rainy season May to November

Terrain of the Dominican Republic: highlands and mountains with fertile valleys

Main economic activities of the Dominican Republic: gold and copper mining, consumer goods, agricultural production including bananas, coffee and sugar

The Dominican Republic is a less economically developed country (LEDC). The economic wealth of the country is increasing; however, unemployment remains a problem. In 2019, 5.9% of the population of the Dominican Republic were unemployed.

1 **(a)** **(i)** Calculate the number of unemployed people in the Dominican Republic in 2019.

..... [1]

(ii) The government has set up national parks in different regions of the Dominican Republic.

Suggest ways that national parks contribute to economic growth.

.....

.....

.....

..... [2]

(b) The Dominican Republic has several different climatic regions. The tables show climate data for two different locations, **P** and **Q**.

location **P**

month	Jan	Feb	Mar	Apr	May	Jun	Jul	Aug	Sep	Oct	Nov	Dec
average temperature / °C	23.9	24.2	24.7	25.4	26.1	26.5	26.8	26.9	27.0	26.4	25.7	24.5
average rainfall / mm	67	55	54	85	231	201	189	189	191	203	112	72

location **Q**

month	Jan	Feb	Mar	Apr	May	Jun	Jul	Aug	Sep	Oct	Nov	Dec
average temperature / °C	25.1	25.2	26.0	26.7	27.4	28.0	28.9	28.8	28.5	27.9	26.7	25.0
average rainfall / mm	13	15	30	34	86	26	26	52	79	80	49	19

(i) Use the climate data to complete the table for location **P** and location **Q**.

	location P	**location Q**
month with highest rainfall		
coldest month		
hottest month		

[3]

(ii) Describe **two** similarities between the climate at location **P** and location **Q**.

Use information from the tables to support your answer.

1 .....

.....

2 .....

.....

[2]

(c) The photograph shows a banana plant.

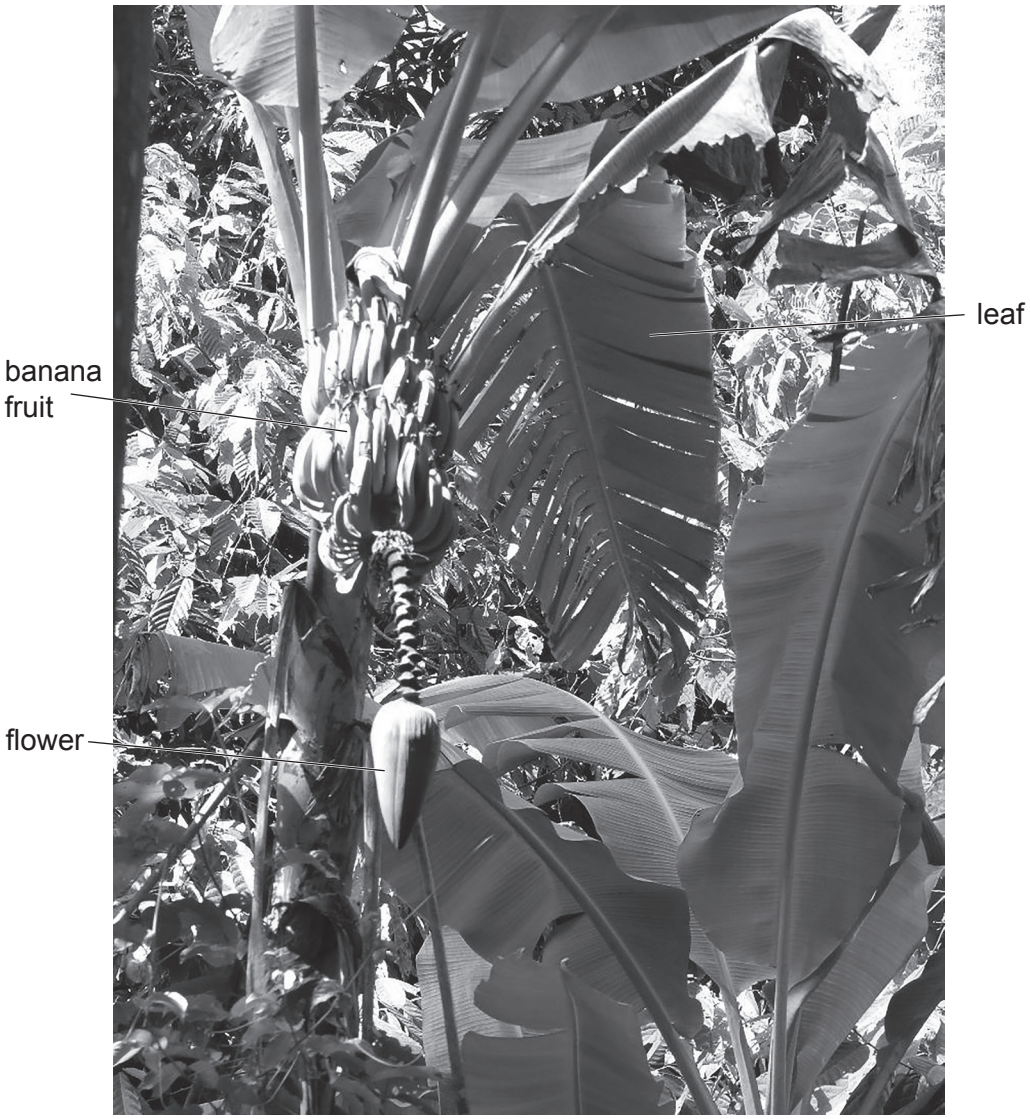

(i) Many farmers grow banana plants near location **Q**.

Banana plants are grown at two-metre intervals in rows that are three metres apart.

Suggest **one** way that farmers can use the three-metre strips of land between the rows of banana plants.

.....

..... [1]

(ii) Banana plants grow quickly and produce fruits without pollination.

Describe the process of pollination.

.....

.....

.....

.....

.....

..... [3]

(iii) Banana plants are grown by subsistence farmers and commercial farmers in the Dominican Republic.

Describe the benefits of subsistence farming.

.....

.....

.....

.....

.....

..... [3]

(d) Some banana fruits are exported to Europe and labelled as ‘organic, fair trade bananas’.

Organic banana plants are grown without using chemical fertilisers or pesticides.

(i) State how farmers who grow organic bananas can control pests on their banana plants.

.....

..... [1]

(ii) State how farmers who grow organic bananas can ensure the soil has enough nutrients.

.....

..... [1]

(iii) State **one** negative impact of using chemical fertilisers.

.....

..... [1]

(iv) Fair trade is when companies agree to pay a fair price to farmers for a crop.

Suggest **one** reason why people in Europe want to buy fair trade bananas.

.....

..... [1]

© UCLES 2021

(e) Bananas are stored in refrigerated containers at 13 °C and loaded onto ships.

It takes 20 days to transport the bananas to Europe by ship.

This transport accounts for 60% of the carbon footprint of banana production.

(i) Define the term *carbon footprint*.

.....

.....

.....

..... [2]

(ii) Suggest why bananas are kept at 13 °C during the journey to Europe.

.....

.....

.....

..... [2]

(iii) A banana ship travels at a constant speed of 15.4 km per hour. The journey takes 20 days.

Calculate the distance this ship travels in 20 days.

..... km [2]

(f) A student notices that some banana plants have long dark streaks on their green leaves. This is caused by a fungal disease called 'black sigatoka'.

The student surveys two organic farms, **X** and **Y**, to compare the number of diseased leaves on banana plants.

The student:

- marks out one plot of 4 × 4 banana plants in the middle of farm **X** and one plot of 4 × 4 banana plants in the middle of farm **Y**
- uses a random number table to select 8 banana plants from each plot
- records the number of leaves per banana plant with black sigatoka disease.

The positions of the 8 selected banana plants in the sample from farm **X** and the sample from farm **Y** are shown in the diagram.

Key
● selected banana plant
○ unselected banana plant

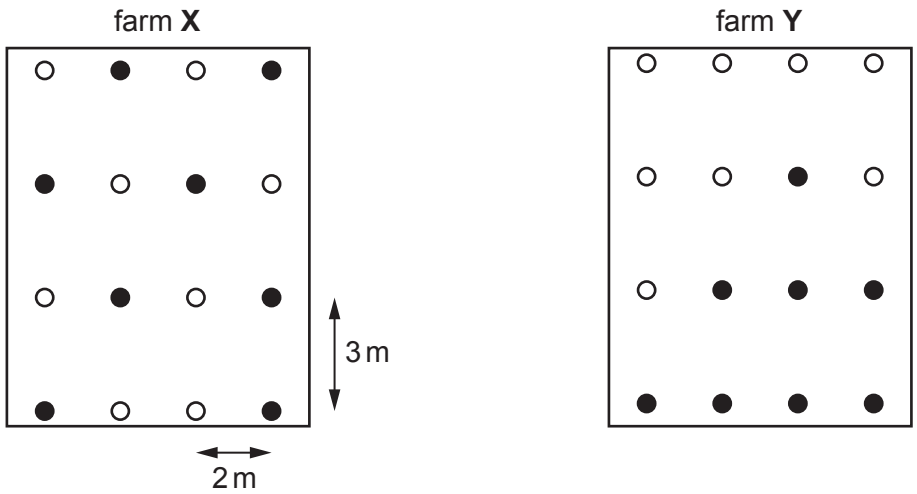

(i) Compare the patterns of selected banana plant positions in farm **X** and farm **Y**.

.....

.....

.....

..... [2]

(ii) Explain why both the samples are representative of all the banana plants on each farm.

.....

..... [1]

(iii) Draw a table the student can use to record the results of this survey.

[3]

(g) One farmer said:

> There are more leaves with black sigatoka fungal disease when the weather is warm and wet. We work hard to control the spread of the disease.

The climate data for farms **X** and **Y** are shown in the table.

month	Jan	Feb	Mar	Apr	May	Jun	Jul	Aug	Sep	Oct	Nov	Dec
average temperature / °C	25.1	25.2	26.0	26.7	27.4	28.0	28.9	28.8	28.5	27.9	26.7	25.0
average rainfall / mm	13	15	30	34	86	26	26	52	79	80	49	19

(i) Identify in which months you expect the fungal disease to spread quickly.

Give a reason for your answer.

months .....

reason .....

.....
[2]

(ii) One method of controlling black sigatoka fungal disease is to remove the diseased leaves from the plants and then burn the leaves.

Suggest **one** advantage and **one** disadvantage of this method compared with spraying the plants with a fungicide.

advantage .....

.....

disadvantage .....

.....
[2]

(iii) Describe **one** method scientists can use to produce a new variety of banana plant that is resistant to black sigatoka.

.....

.....

.....

..... [2]

[Total: 37]

2 The drawing shows part of a large copper mine in the Dominican Republic. The mine is expected to be open until 2024.

(a) Suggest why this mine pollutes a nearby stream after rainfall events.

.....

..... [1]

(b) The world copper price in 1000 USD per tonne from 2014 to 2019 is shown in the table.

year	2014	2015	2016	2017	2018	2019
world copper price / 1000 USD per tonne	7.2	5.5	4.3	5.9	7.0	6.1

(i) On the grid, plot a graph of world copper price in 1000 USD per tonne against year.

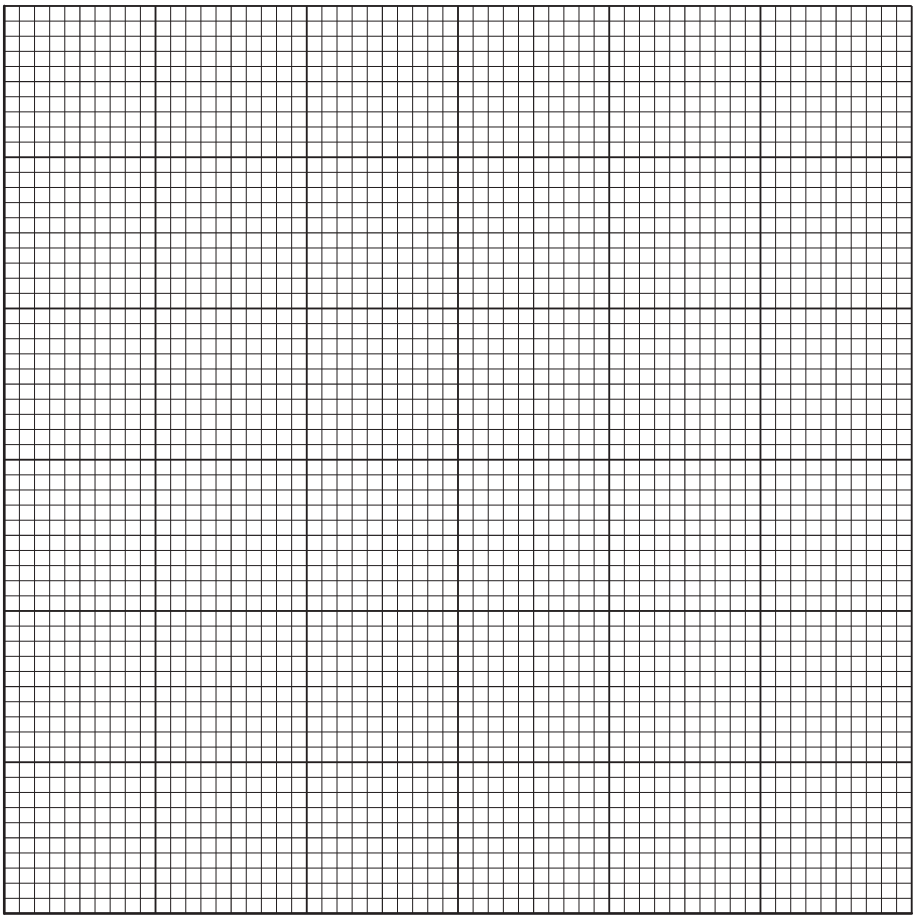

[4]

(ii) Calculate the average world copper price in 1000 USD per tonne for 2014 to 2019.

average world copper price = ... 1000 USD per tonne [1]

(iii) This mine made a profit in 2016.

Suggest reasons why this mine might **not** be profitable in 2022.

.....

.....

.....

..... [2]

(c) The diagram shows a map of the copper mine.

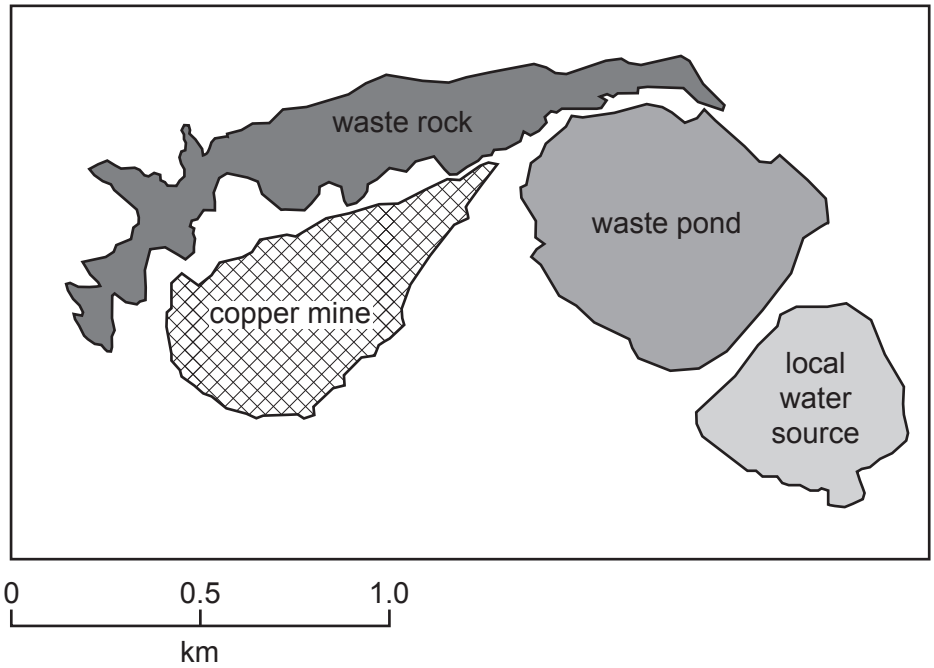

Copper ore is extracted from the mine.

The copper ore is treated at the mine using water.

The waste water from the treatment is stored in the waste pond.

(i) Estimate the area of the waste pond.

area = ... km^2 [2]

(ii) Suggest reasons why some local people are worried that the waste pond will leak or burst.

.....

.....

.....

.....

.....

..... [3]

(iii) The mine is expected to close in 2024.

Suggest reasons why the government has made the mining company responsible for monitoring the waste pond until 2040.

.....

.....

.....

..... [2]

[Total: 15]

3 Many tourists visit the national parks of the Dominican Republic every year. Some tourists that visit the national parks are ecotourists.

One ecotourist says:

> When visiting a national park, I try to have a very low impact on the local environment. I know it is impossible to have **zero** impact.

(a) Explain why it is impossible for ecotourists to have **zero** impact on the local environment.

.....

.....

.....

.....

.....

.....

.....

..... [4]

(b) The Dominican Republic has one marine reserve in the Caribbean Sea. The marine reserve is 20 km from the capital city, Santo Domingo.

Only scientists are allowed to visit this marine reserve to study the many coral and fish species.

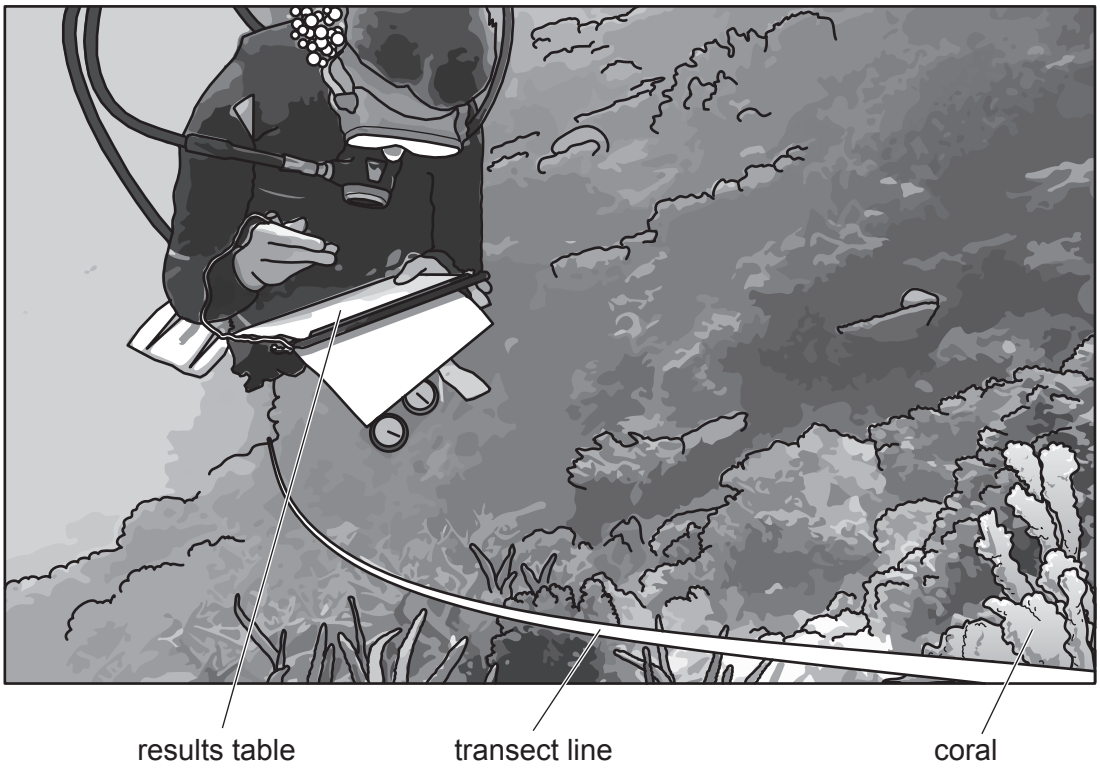

The scientist in the drawing is diving underwater to survey the coral species directly below the transect line.

(i) Name the type of sampling the scientist is using.

..... [1]

(ii) Suggest **two** reasons why this coral survey is repeated every year.

1 .....

.....

2 .....

.....
[2]

(iii) There are many coastal sites around the Dominican Republic where tourists dive underwater to see the tropical species of coral and fish.

Suggest how data from the surveys of the marine reserve can help to manage the impact of diving at other coastal sites.

.....

.....

.....

.....

.....

..... [3]

(iv) The Dominican Republic has several zoos.

Suggest **one** benefit and **one** limitation of using zoos to preserve biodiversity.

benefit .....

.....

limitation .....

.....
[2]

(c) The Ozama River flows through the middle of Santo Domingo into the sea.

When there is a storm, people living near this river are at risk of flooding.

The government has opened an emergency help centre to manage the short-term impacts of flooding.

(i) Suggest **three** ways that the emergency help centre can manage the short-term impacts of flooding.

1 .....

.....

2 .....

.....

3 .....

.....

[3]

(ii) After a storm, the beaches near Santo Domingo are polluted with plastic waste from the city.

Suggest **two** impacts on the environment of burning the plastic waste removed from the beaches.

1 .....

.....

2 .....

.....

[2]

(d) A monitoring station measures the amount of rainfall and river discharge at one location on the Ozama River.

River discharge is the total volume of water flowing past a point on a river in one second.

The hydrograph shows data during and after one storm event.

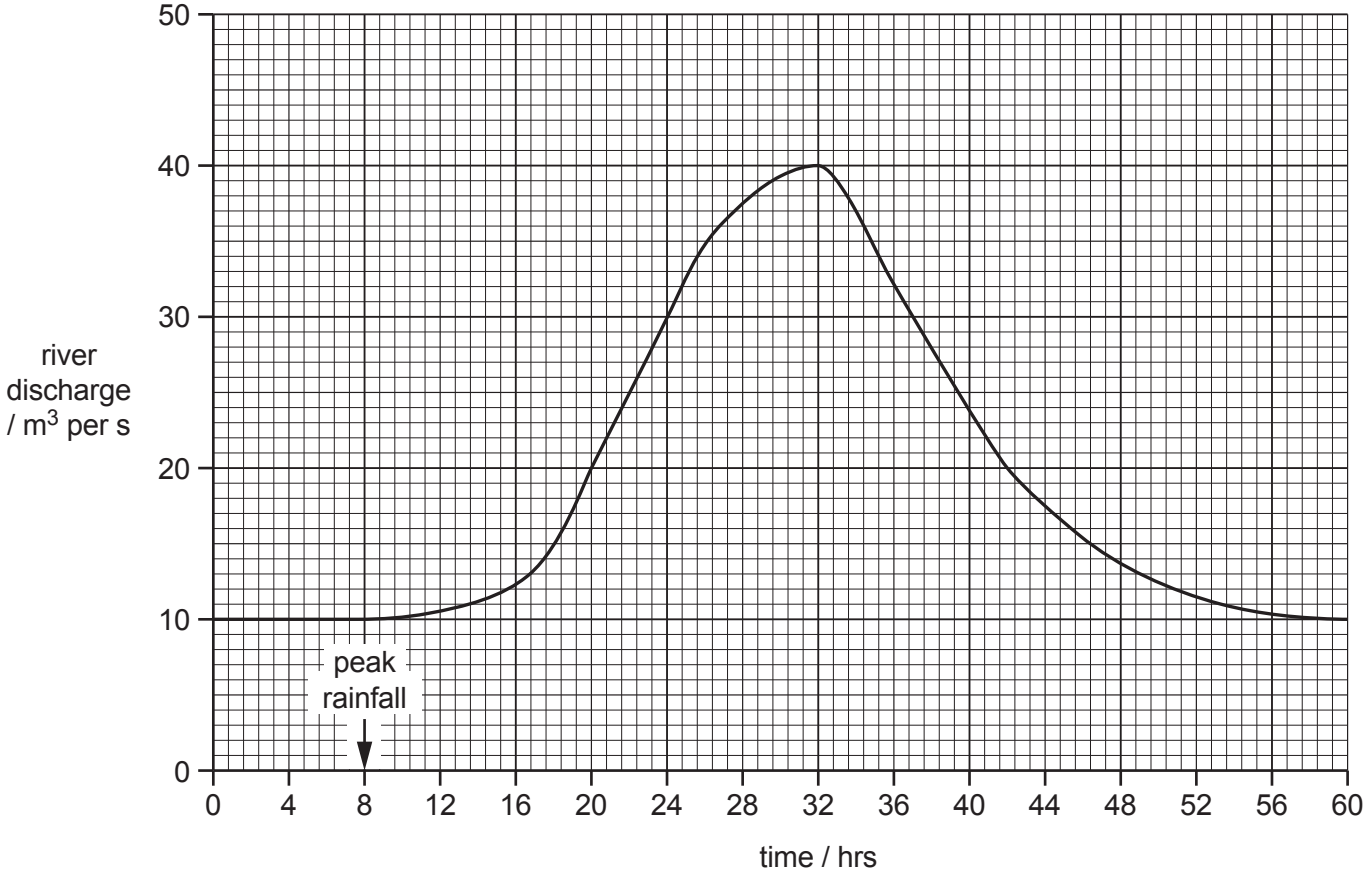

The river floods when the river discharge is greater than 20 m^3 per s.

(i) On the hydrograph, shade an area under the graph to show when the river is flooding. [1]

(ii) Calculate how many hours after peak rainfall that peak river discharge occurs.

..... hours [1]

(iii) It takes many hours for the river discharge to return to the same level as before the storm event.

Suggest reasons why.

.....

.....

.....

.....

.....

..... [3]

(iv) Explain why flooding can be beneficial in some areas.

.....

.....

.....

..... [2]

(v) Two students decide to measure the **rate** of flow of water in a small stream that joins the river.

The students have the equipment shown in the diagram.

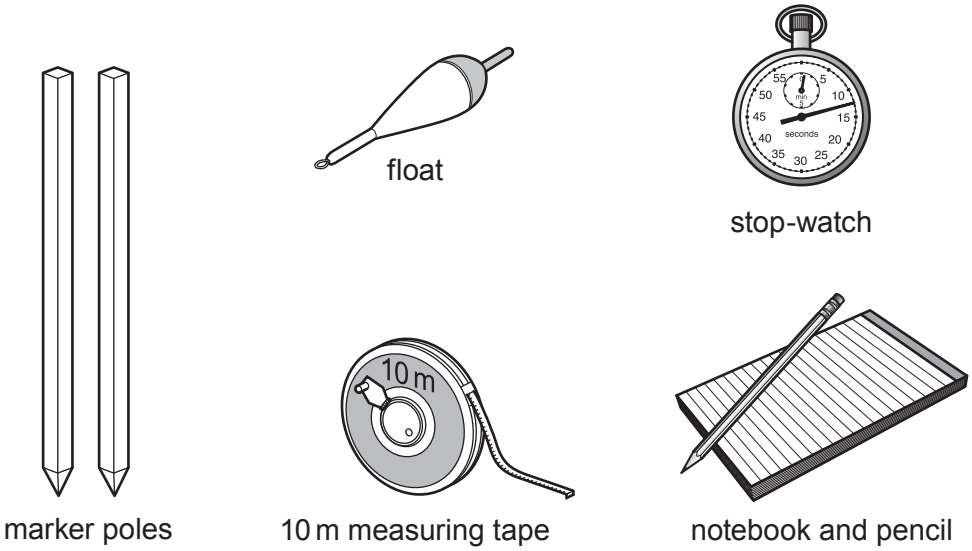

Describe a method that the students can use to measure the **rate** of flow of water in the stream.

.....

.....

.....

.....

.....

.....

.....

..... [4]

[Total: 28]

The boundaries and names shown, the designations used and the presentation of material on any maps contained in this question paper/insert do not imply official endorsement or acceptance by Cambridge Assessment International Education concerning the legal status of any country, territory, or area or any of its authorities, or of the delimitation of its frontiers or boundaries.

Permission to reproduce items where third-party owned material protected by copyright is included has been sought and cleared where possible. Every reasonable effort has been made by the publisher (UCLES) to trace copyright holders, but if any items requiring clearance have unwittingly been included, the publisher will be pleased to make amends at the earliest possible opportunity.

To avoid the issue of disclosure of answer-related information to candidates, all copyright acknowledgements are reproduced online in the Cambridge Assessment International Education Copyright Acknowledgements Booklet. This is produced for each series of examinations and is freely available to download at www.cambridgeinternational.org after the live examination series.

Cambridge Assessment International Education is part of the Cambridge Assessment Group. Cambridge Assessment is the brand name of the University of Cambridge Local Examinations Syndicate (UCLES), which itself is a department of the University of Cambridge.

© UCLES 2021